Item	Name	Q.ty
1	GRF14.35.07	1
2	GRF14.35.08	1
3	GRF14.95.01	1
4	GRF14.95.02	1
5	GRF14.95.03	1
6	GRF14.95.03.2	1
7	GRF14.95.04	1
8	GRF14.95.05	1
9	GRF14.95.10	1
10	ORM.0100.10	1
11	PAP.070910	1
12	PSP.100603	1
13	SP.2,5x08M6	1
14	SP.2x12M6	1
15	M.10X32A	1

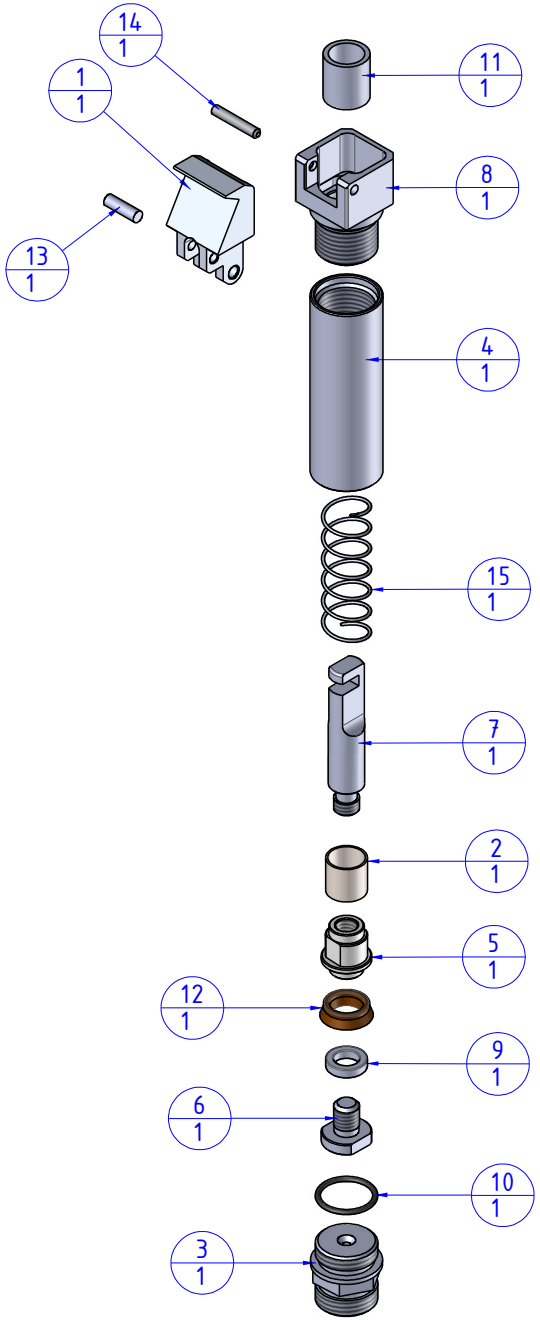

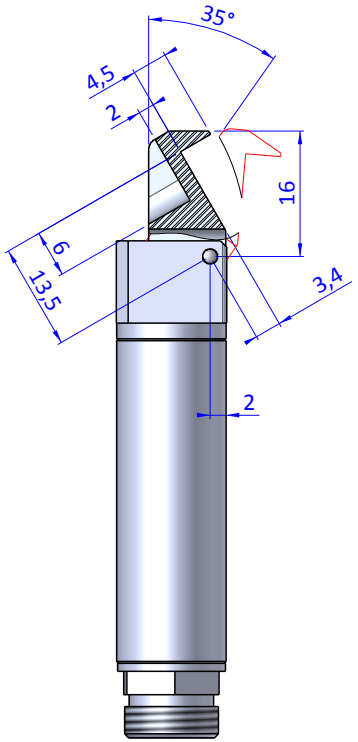

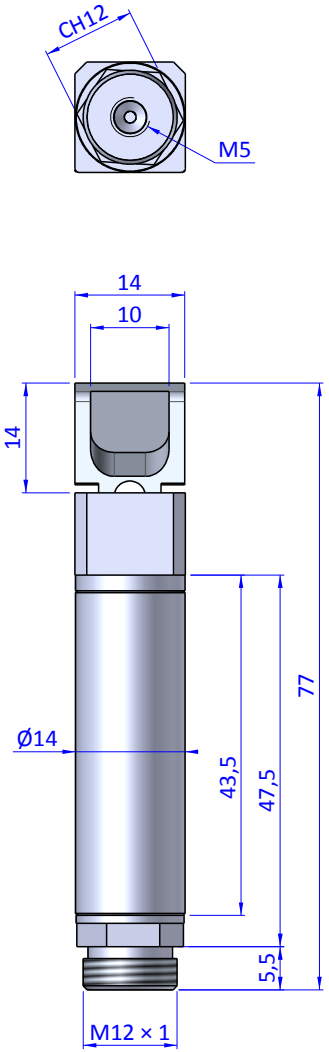

THE PROPERTY OF THE DRAWING IS ESTABLISHED BY LAW. IT IS FORBIDDEN TO PRODUCE OR SHOW IT TO THIRD PART WITHOUT A WRITTEN AGREEMENT

Format A3

UNI 936-76

FPS
FPSERVICES AUTOMATION

GENERAL TOLERANCE
UNI - ISO 2768
CLASSE f

DESCRIPTION
CA.GRF.1435

DESIGNED FROM
FPS Automation

REVIEW
A

DATE
26/03/2019

WEIGHT
0,029kg

CODE
CA.GRF.1435